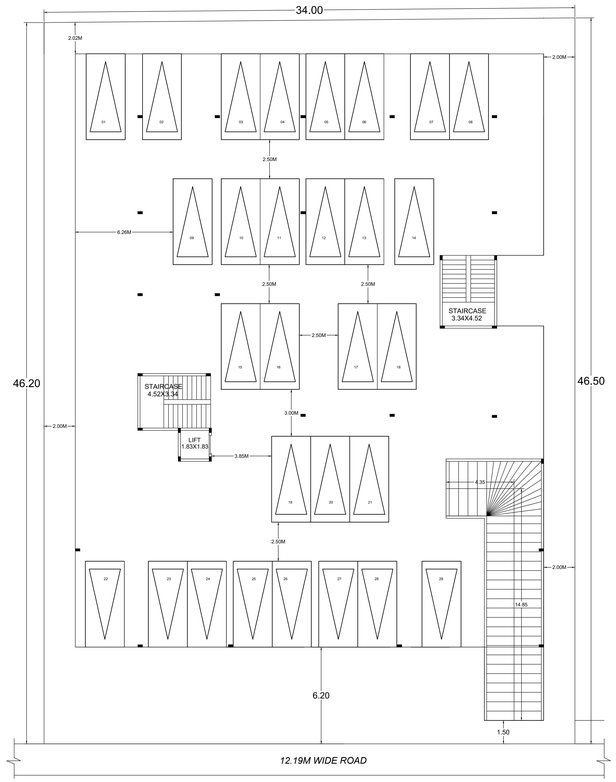

EX. BASEMENT FLOOR PLAN

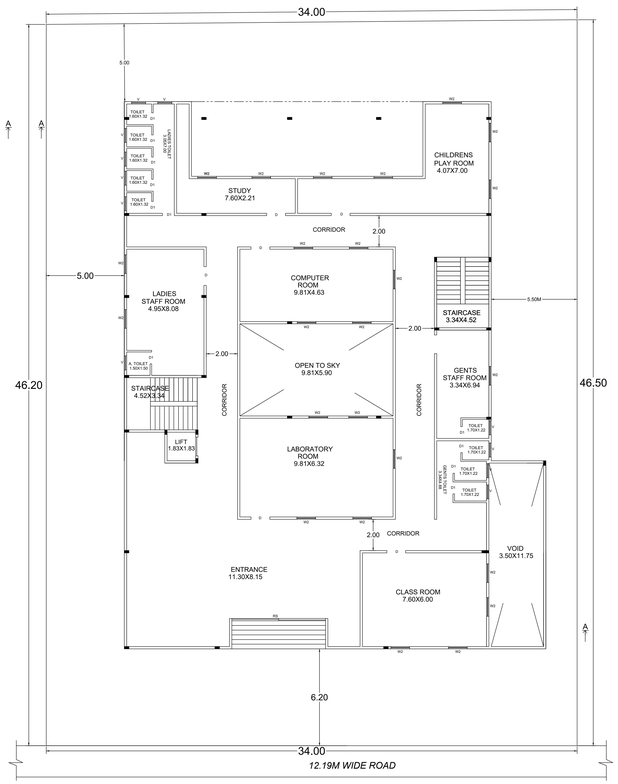

EX.GROUND FLOOR PLAN

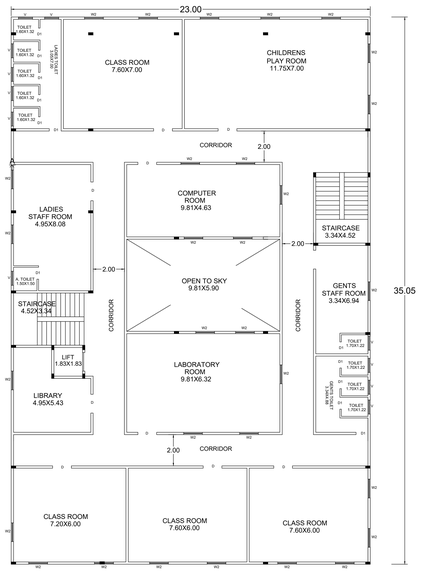

EX. FIRST FLOOR PLAN

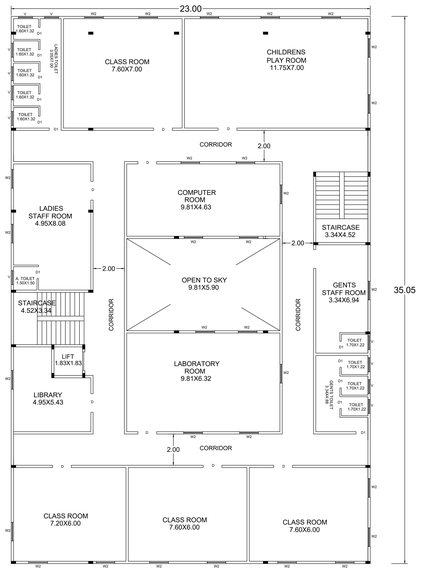

EX. SECOND FLOOR PLAN

C. A. SITE NO: 17/A2.

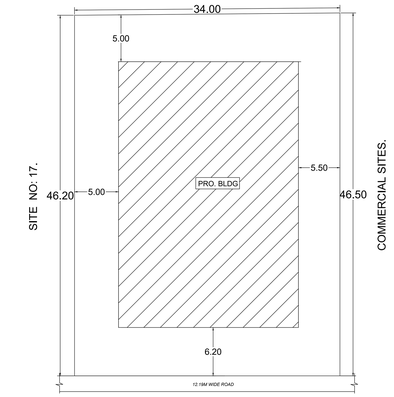

SITE PLAN

Approval Condition :

This Plan Sanction is issued subject to the following conditions :

1.The sanction is accorded for:
a) Consisting of 'Block - A (A) Wing - A-1 (A) Consisting of BASEMENT, GF+2UF'
2.The sanction is accorded for Nursery School-A (A) only. The use of the building shall not deviate to any other use.
3.Car Parking reserved in the plan should not be converted for any other purpose.
4.Development charges towards increasing the capacity of water supply, sanitary and power main to your site is to be paid to the BWSSB.
5.Necessary ducts for running telephone cables, cuticles at ground level for postal services & space for dumping garbage within the premises shall be provided.
6.The applicant shall construct temporary toilets for the use of construction workers and it should be demolished after the construction.
7.The applicant shall INSURE all workmen involved in the construction work against any accident / unforeseen incidents arising during the time of construction.
8.The applicant shall not store or place any building materials or debris on footpath or on roads or on drains. The debris shall be removed and transported to near by dumping yard.
9.The applicant / builder is prohibited from selling the setback area / open spaces and the common facility areas, which shall be accessible to all the tenants and occupants.
10.The applicant shall provide a space for locating the distribution transformers & associated equipment as per K.E.R.C (Edt.3) code leaving 3.00 mts. from the building within the premises.
11.The applicant shall provide a separate room preferably 4.50 x 3.65 m in the basement for installation of telecom equipment and also to make provisions for telecom services as per Bye-law No. 29.

12.The applicant shall maintain during construction such barricading as considered necessary to prevent dust, debris & other materials endangering the safety of people / structures etc. in & around the site.
13.Permission shall be obtained from forest department for cutting trees before the commencement of the work.
14.License and approved plans shall be posted in a conspicuous place of the licensed premises. The building area sketch / copies of sanctioned plans with specifications shall be mounted on a frame and displayed and they shall be made available during inspections.
15.If any owner / builder contravenes the provisions of Building Bye-laws and rules in force, the Architect / Engineer / Supervisor will be informed by the Authority in the first instance, warned in the second instance and cancel the registration if the same is repeated for the third time.
16.Technical personnel, applicant or owner as the case may be shall strictly adhere to the duties and responsibilities specified in Schedule - IV (Bye-law No. 3.8) under sub section IV-8 (e) to (k).
17.The owner shall get the building / site inspected by the concerned officers before the occupation or holding of walls / columns of the foundation. Otherwise the plan sanction deemed cancelled.
18.On completion of foundation or footings before erection of walls on the foundation and in the case of columnar structure before erecting the columns "COMMENCEMENT CERTIFICATE" shall be obtained.
19.Construction or reconstruction of the building should be completed before the expiry of five years from the date of issue of license & within one month after its completion shall apply for permission to occupy the building.
20.The building should not be occupied without obtaining "OCCUPANCY CERTIFICATE" from the competent authority.
21.Drinking water supplied by BWSSB should not be used for the construction activity of the building.
22.The applicant shall ensure that the Rain Water Harvesting Structures are provided & maintained in good repair for storage of water for non potable purposes or recharge of ground water at all times having a minimum total capacity mentioned in the Bye-law 32(a).
23.The building shall be designed and constructed adopting the norms prescribed in National Building Code of India and the National Standards applicable to earthquake resistance IS 1893-2002 published by the Bureau of Indian Standards making the building resistant to earthquake.
24.The applicant should provide solar water heaters as per table 17-F of Bye-law No. 29 for the building.
25.Facilities for physically handicapped persons prescribed in schedule XI (Bye laws - 31) of Building bye-laws 2003 shall be ensured.
26.The applicant shall provide at least one common toilet in the ground floor for the use of the physically handicapped persons. Care should be taken that the toilet can be approached through a ramp for the Physically Handicapped persons together with the elegant seat.
27.The Occupancy Certificate will be considered only after ensuring that the provisions of conditions vide Sl. No. 23, 24, 25 & 26 are provided in the building.
28.The applicant shall ensure that no inconvenience is caused to the neighbors in the vicinity of construction and that the construction activities shall stop before 10.00 PM and shall not resume the work earlier than 7.00 AM to avoid hindrance during late hours and early morning hours.

29.Garbage originating from Apartments / Commercial buildings shall be segregated into organic and inorganic waste and should be processed in the Recycling processing unit ----- e.g.(capacity installed at site for its re use / disposal (Applicable for Residential units of 20 and above and 2000 Sqm and above built up area for Commercial building).
30.The structures with basements shall be designed for structural stability and safety to ensure for soil stabilization during the course of excavation for basements with safe design for retaining walls and super structure for the safety of the structure as well as neighboring property, public roads and footpaths, and besides ensuring safety of workman and general public by erecting safe barricades.
31.Sufficient two wheeler parking shall be provided as per requirement.
32.Traffic Management Plan shall be obtained from Traffic Management Consultant for all high rise structures which shall be got approved from the Competent Authority if necessary.
33.The owner / association of high-rise building shall obtain fire clearance certificate from Karnataka Fire and Emergency Department every Two years with due inspection by the department regarding working condition of Fire Safety Measures installed. The certificate should be produced to the Corporation and shall get the renewal of the permission issued once in Two years.
34.The Owner / Association of high-rise building shall get the building inspected by empanelled agencies of the Karnataka Fire and Emergency Department to ensure that the equipment's installed are in good and workable condition, and an affidavit to that effect shall be submitted to the Corporation every Year by the Association / Owner.
35.The Owner / Association of high-rise building shall obtain clearance certificate from the Electrical Inspectorate every Two years with due inspection by the Department regarding working condition of Electrical installation / Lifts etc.,. The certificate should be produced to the BBMP and get the renewal of the permission issued that once in Two years.
36.The Owner / Association of the high-rise building shall conduct two mock - trials in the building , one before the onset of summer and another during the summer and assure complete safety in respect of Fire & Lifts.
37.The Builder / Contractor / Professional responsible for supervision of work shall not shall not materially and structurally deviate the construction from the sanctioned plan, without previous approval of the authority. They shall explain to the owner a about the risk involved in contravention of the provisions of the Act, Rules, Bye-laws, Zoning Regulations, Standing Orders and Policy Orders of the BBMP.
38.The construction or reconstruction of a building shall be commenced within a period of two (2) years from date of issue of license. Before the expiry of two years, the Owner / Developer shall give intimation to BBMP (Sanctioning Authority) of the intention to start work in the form prescribed in Rule-18 (1) of KMC Act. Failure to give such intimation shall entail cancellation of the sanction. Erection or footing of walls / columns of the foundation. Otherwise the plan sanction deemed cancelled.
39.In case of Development plan, Parks and Open Spaces area and Surface Parking area shall be earmarked and reserved as per Development Plan issued by the Bangalore Development Authority.
40.All other conditions and conditions mentioned in the work order issued by the Bangalore Development Authority while approving the Development Plan for the project should be strictly adhered to.
41.The Applicant / Owner / Developer shall abide by the collection of solid waste and its segregation as per solid waste management byel-law 2016.
42.The applicant/owner/developer shall abide by sustainable construction and demolition waste management as per solid waste management bye-law 2016.
43.The Applicant / Owners / Developers shall make necessary provision to charge electrical vehicles.
44.The Applicant / Owner / Developer shall plant one tree for ea ches measuring 180 Sqm. up to 240 Sq.m of the site area as per the Karnataka Municipal Corporations Act - 1976 and one tree for every 240 Sq.m of the FAR area as part thereof in case of Apartment / group housing / multi-dwelling unit/development plan.
45.In case of any false information, misrepresentation of facts, or pending court cases, the plan sanction is deemed cancelled.
46.Also see, building licence for special conditions, if any.
Special Condition as per Labour Department of Government of Karnataka vide.ADDENDUM (Howalaag Hoodiee) Letter No. LD06LET2013, dated: 31-04-2013 :

1.Registration of
Applicant / Builder / Owner / Contractor and the construction workers working in the construction site with the "Karnataka Building and Other Construction workers Welfare Board"should be strictly adhered to.

2.The Applicant / Builder / Owner / Contractor should submit the Registration of establishment and list of construction workers engaged at the time of issue of Commencement Certificate. A copy of the same shall also be submitted to the concerned local Engineer in order to inspect the establishment and ensure the registration of establishment and workers working at construction site or work place.
3.The Applicant / Builder / Owner / Contractor shall also inform the changes if any of the list of workers engaged by him.
4.At any point of time No Applicant / Builder / Owner / Contractor shall engage a construction worker at his site or work place who is not registered with the "Karnataka Building and Other Construction workers Welfare Board".

Note :

1.Accommodation shall be provided for setting up of schools for imparting education to the children o f construction workers in the labour camps / construction sites.
2.Cess as per the rate prevailing shall be furnished by the builder / contractor to the Labour Department which is mandatory.
3.Employment of child labour in the construction activities strictly prohibited.
4.Obtaining NOC from the Labour Department before commencing the construction work is a must. 5.BBMP will not be responsible for any dispute that may arise in respect of property in question.
6.In case if the documents submitted in respect of property in question is found to be false or fabricated, the plan sanctioned stands cancelled automatically and legal action will be initiated.

AREA STATEMENT (BBMP)	VERSION NO : 1.0.16	
	VERSION DATE: 10/11/2020	
PROJECT DETAIL:		
Authority: BBMP	Plot Use: Educational	
Inward_No: BBMP/Ad.Cons.To/6300020-21	Plot SubUse: Nursery School	
Application Type: General	Land Use Zone: Public and Semi Public	SCALE : 1:100
Proposal Type: Building Permission	PreSub Plot No : 17/A1	
Nature of Sanction: ADDITION OR EXTENSION	Khata No. (As per Khata Extract): 1203/17/A1	
Location: RESIDUAL	Locality / Street of the property: "A" SECTOR YELAHANKA NEW TOWN	
Building Line Specified as per Z.R: NA		
Zone: Yelahanka		
Ward: Ward-004		
Planning District: 304-Byatarayanapura		
AREA DETAILS:		SQ.MT.
AREA OF PLOT (Minimum)	(A)	1575.90
NET AREA OF PLOT	(A-Deductions)	1575.90
COVERAGE CHECK		
Permissible Coverage area (50.00 %)		787.95
Proposed Coverage Area (47.65 %)		750.55
Achieved Net coverage area (47.65 %)		750.55
Balance coverage area left (2.35 %)		37.50
FAR CHECK		
Permissible F.A.R. as per zoning regulation 2015 (2.50)		3151.80
Additional F.A.R within Ring I and II (for amalgamated plot -)		0.00
Allowable TDR Area (60% of Perm.FAR)		0.00
Premium FAR for Plot within Impact Zone (-)		0.00
Total Permi. FAR area (2.50)		3151.80
Special FAR (0.15)		32.19
Building Special FAR (%)		1768.66
Proposed FAR Area		1768.66
Achieved Net FAR Area (1.14)		1768.66
Balance FAR Area (0.86)		1382.94
BUILT UP AREA CHECK		
Proposed BuiltUp Area		3849.49
Existing BUA Area		3633.07
SubStructure Area Add in BUA (Layout Lvl)		1.27
Achieved BuiltUp Area		3783.54

Approval Date : 01/21/2021 12:38:50 PM

Payment Details

Sr No.	Challan Number	Receipt Number	Amount (INR)	Payment Mode	Transaction Number	Payment Date	Remark
1	BBMP/2032/CH/20-21	BBMP/2032/CH/20-21	35	Online	19103004703	10/10/2020 1:24:16 PM	-
	No.		Head		Amount (INR)	Remark	
	1		Scrutiny Fee		35	-	

Color Notes

COLOR INDEX

- PLOT BOUNDARY
- ABUTTING ROAD
- PROPOSED WORK (COVERAGE AREA)
- EXISTING (To be retained)
- EXISTING (To be demolished)

OWNER / GPA HOLDER'S SIGNATURE

OWNER'S ADDRESS WITH ID NUMBER & CONTACT NUMBER :
The Chairman, Sri Ramakrishna Educational Trust (R) Represented by Sri Devadas "A" SECTOR YELAHANKA NEW TOWN

ARCHITECT/ENGINEER /SUPERVISOR 'S SIGNATURE
KIRAN KUMAR 035 No 336, Talakaveri layout, Amruthahalli, Bangalore-92, Mob:9535864089 e-4195/2016-17

PROJECT TITLE :
PLAN SHOWING THE ADDITIONS & ALTERATIONS TO NURSING SCHOOL BUILDING AT SITE NO 17/A1,KATHA NO:1203/17/A1, 'A' SECTOR YELAHANKA NEW TOWN,WARD NO:04,BANGALORE.

DRAWING TITLE : 1950634077-19-01-2021 11-37-319_STAPROOT COLLEGE FINAL

SHEET NO : 1

Note: Earlier plan sanction vide L.P.No. dated ..... is deemed cancelled.
The modified plans are approved in accordance with the acceptance for approval by the Joint Commissioner Yelahanka on date 21/01/2021 vide lp number: BBMP/Ad.Cons./YLK/0700/20-21 ..... subject to terms and conditions laid down along with this modified building plan approval.
This approval of Building plan/ Modified plan is valid for two years from the date of issue of plan and building licence by the competent authority.

YELAHANKA

NAME: C NARAYANASWAMY
DESIGNATION : Assistant Director Town Planning
LOCATION : BBMP
AREA : YELAHANKA BANGALORE
MAHANAGARA PALIKE

This is system generated report and does not require any signature.

Accuracy of Scrutiny Report and Drawing is subject to accuracy of end-user provided data, 3rd party software/hardware/services, etc. We are not liable for any damages which may arise from use, or inability to use the Application.

Block :A (A)

Floor Name	Total Built Up Area (Sq.mt.)	Existing Built Up Area (Sq.mt.)	Proposed Built Up Area (Sq.mt.)	Deductions (Area in Sq.mt.)							Existing FAR Area (Sq.mt.)	Proposed FAR Area (Sq.mt.) Educational	Total FAR Area (Sq.mt.)
				StairCase	Lift	Lift Machine	Void	Ramp	Parking				
Terrace Floor	32.05	0.00	32.05	28.70	0.00	3.35	0.00	0.00	0.00	0.00	0.00	0.00	0.00
Third Floor	290.84	143.68	117.15	81.62	3.35	0.00	0.00	0.00	0.00	0.00	143.68	32.19	175.87
Second Floor	806.02	806.02	0.00	196.15	3.35	0.00	57.88	0.00	0.00	0.00	548.64	0.00	548.64
First Floor	805.98	805.98	0.00	196.15	3.35	0.00	57.88	0.00	0.00	0.00	548.60	0.00	548.60
Ground Floor	792.95	792.95	0.00	163.97	3.35	0.00	57.88	0.00	0.00	0.00	525.75	0.00	525.75
Basement Floor	1193.64	1126.44	0.00	30.41	3.35	0.00	0.00	67.20	1092.68	0.00	0.00	0.00	0.00
Total:	3849.48	3633.07	149.20	697.00	16.75	3.35	173.64	67.20	1092.68	1766.66	32.19	1798.86	
Total Number of Same Blocks	1												
Total:	3849.48	3633.07	149.20	697.00	16.75	3.35	173.64	67.20	1092.68	1766.66	32.19	1798.86	

SCHEDULE OF JOINERY:

BLOCK NAME	NAME	LENGTH	HEIGHT	NOS
A (A)	D1	0.76	2.10	03
A (A)	D	1.10	2.10	31

SCHEDULE OF JOINERY:

BLOCK NAME	NAME	LENGTH	HEIGHT	NOS
A (A)	V	1.20	2.10	01
A (A)	W1	1.80	2.10	197
A (A)	V	1.80	2.10	34
A (A)	V	2.50	2.40	01

UnitBUA Table for Block :A (A)

FLOOR	Name	UnitBUA Type	Entity Type	UnitBUA Area	Carpet Area	No. of Rooms	No. of Tenement
GROUND FLOOR PLAN	split	OTHER	Existing	689.72	689.72	8	1
FIRST FLOOR PLAN	SPLIT	OTHER	Existing	744.76	744.76	11	1
SECOND FLOOR PLAN	SPLIT	OTHER	Existing	744.79	744.79	11	1
THIRD FLOOR PLAN	SPLIT	OTHER	Existing	143.68	143.68	3	2
	SPLIT	OTHER	Proposed	25.68	25.68	1	
Total:	-	-	-	2348.64	2348.64	35	5

FAR &Tenement Details

Block	No. of Same Bldg	Total Built Up Area (Sq.mt.)	Existing Built Up Area (Sq.mt.)	Proposed Built Up Area (Sq.mt.)	Deductions (Area in Sq.mt.)						Existing FAR Area (Sq.mt.)	Proposed FAR Area (Sq.mt.) Educational	Total FAR Area (Sq.mt.)
					StairCase	Lift	Lift Machine	Void	Ramp	Parking			
A (A)	1	3849.48	3633.07	149.20	697.00	16.75	3.35	173.64	67.20	1092.68	1766.66	32.19	1798.86
Grand Total:	1	3849.48	3633.07	149.20	697.00	16.75	3.35	173.64	67.20	1092.68	1766.66	32.19	1798.86

Block USE/SUBUSE Details

Block Name	Block Use	Block SubUse	Block Structure	Block Land Use Category
A (A)	Educational	Nursery School	Bldg upto 15.0 mt. Ht.	PUBLIC

Required Parking(Table 7a)

Block Name	Type	SubUse	Area (Sq.mt.)	Units		Car		
				Reqd.	Prop.	Reqd./Unit	Reqd.	Prop.
A (A)	Educational	Nursery School	> 0	150	1798.87	1	12	-
Total :			-	-	-	-	12	29

Parking Check (Table 7b)

Vehicle Type	Reqd.		Achieved	
	No.	Area (Sq.mt.)	No.	Area (Sq.mt.)
Car	12	165.00	29	398.75
Total Car	12	165.00	29	398.75
Two/Wheeler	-	27.50	0	0.00
Other Parking	-	-	-	653.93
Total		192.50		1052.68

FAR &Tenement Details

Block	No. of Same Bldg	Total Built Up Area (Sq.mt.)	Existing Built Up Area (Sq.mt.)	Proposed Built Up Area (Sq.mt.)	Deductions (Area in Sq.mt.)						Existing FAR Area (Sq.mt.)	Proposed FAR Area (Sq.mt.) Educational	Total FAR Area (Sq.mt.)
					StairCase	Lift	Lift Machine	Void	Ramp	Parking			
A (A)	1	3849.48	3633.07	149.20	697.00	16.75	3.35	173.64	67.20	1092.68	1766.66	32.19	1798.86
Grand Total:	1	3849.48	3633.07	149.20	697.00	16.75	3.35	173.64	67.20	1092.68	1766.66	32.19	1798.86

UserDefinedMetric (1650.00 x 910.00MM)

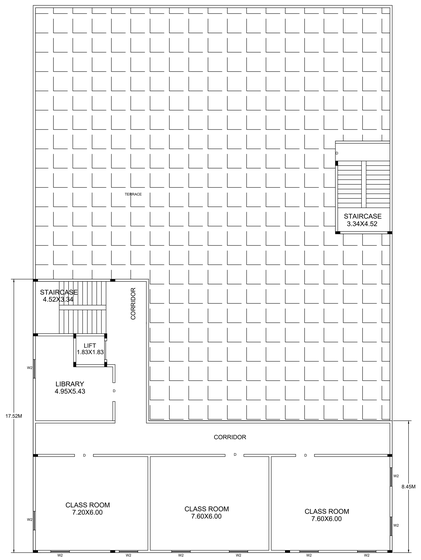

ADD & ALTERARIONS TO EX. THIRD FLOOR PLAN

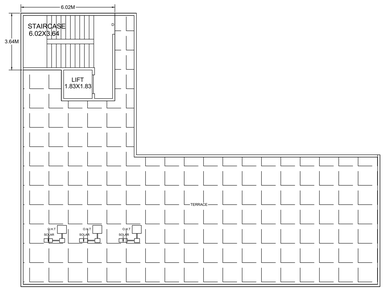

TERRACE FLOOR PLAN

FRONT ELEVATION

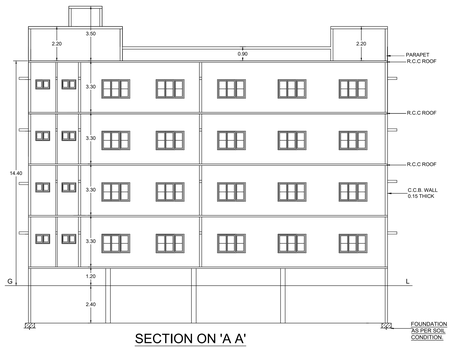

SECTION ON 'A A'

C. A. SITE NO: 17/A2.

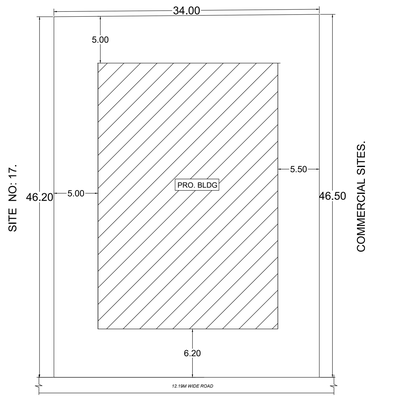

SITE PLAN

Block :A (A)

Floor Name	Total Built Up Area (Sq.mt.)	Existing Built Up Area (Sq.mt.)	Proposed Built Up Area (Sq.mt.)	Deductions (Area in Sq.mt.)							Existing FAR Area (Sq.mt.)	Proposed FAR Area (Sq.mt.) Educational	Total FAR Area (Sq.mt.)
				StairCase	Lift	Lift Machine	Void	Ramp	Parking				
Terrace Floor	32.05	0.00	32.05	28.70	0.00	3.35	0.00	0.00	0.00		0.00	0.00	0.00
Third Floor	260.84	143.68	117.15	81.62	3.35	0.00	0.00	0.00	0.00		143.68	32.19	175.87
Second Floor	806.02	806.02	0.00	196.15	3.35	0.00	57.88	0.00	0.00		548.64	0.00	548.64
First Floor	805.98	805.98	0.00	196.15	3.35	0.00	57.88	0.00	0.00		548.60	0.00	548.60
Ground Floor	750.95	750.95	0.00	163.97	3.35	0.00	57.88	0.00	0.00		525.75	0.00	525.75
Basement Floor	1103.64	1126.44	0.00	30.41	3.35	0.00	0.00	67.20	1092.68		0.00	0.00	0.00
Total:	3849.48	3633.07	149.20	697.00	16.75	3.35	173.64	67.20	1092.68		1766.68	32.19	1798.86
Number of Same Blocks	1												
Total:	3849.48	3633.07	149.20	697.00	16.75	3.35	173.64	67.20	1092.68		1766.68	32.19	1798.86

SCHEDULE OF JOINERY:

BLOCK NAME	NAME	LENGTH	HEIGHT	NOS
A (A)	D1	0.76	2.10	03
A (A)	D	1.10	2.10	31

SCHEDULE OF JOINERY:

BLOCK NAME	NAME	LENGTH	HEIGHT	NOS
A (A)	v	1.20	2.10	01
A (A)	W1	1.80	2.10	197
A (A)	V	1.80	2.10	04
A (A)	V	2.50	2.40	01

UnBUA Table for Block :A (A)

FLOOR	Name	UnBUA Type	Entry Type	UnBUA Area	Carpet Area	No. of Rooms	No. of Tenement
GROUND FLOOR PLAN	MR	OTHER	Existing	689.72	689.72	9	1
FIRST FLOOR PLAN	SPLIT	OTHER	Existing	744.79	744.79	11	1
SECOND FLOOR PLAN	SPLIT	OTHER	Existing	744.79	744.79	11	1
THIRD FLOOR PLAN	SPLIT	OTHER	Existing	143.68	143.68	3	2
	SPLIT	OTHER	Proposed	25.69	25.69	1	
Total:	-	-	-	2348.64	2348.64	35	5

Block USE/SUBUSE Details

Block Name	Block Use	Block SubUse	Block Structure	Block Land Use Category
A (A)	Educational	Nursery School	Bldg upto 15.0 mt. Ht.	R-(pt)

Required Parking(Table 7a)

Block Name	Type	SubUse	Area (Sq.mt.)	Units			Car		
				Reqd.	Prop.	Reqd./Unit	Reqd.	Prop.	
A (A)	Educational	Nursery School	> 0	150	1798.87	1	12	-	
	Total :		-	-	-	-	12	29	

Parking Check (Table 7b)

Vehicle Type	Reqd.		Achieved.	
	No.	Area (Sq.mt.)	No.	Area (Sq.mt.)
Car	12	165.00	29	398.75
Total Car	12	165.00	29	398.75
Two/Three wheeler	-	27.50	0	0.00
Other Parking	-	-	-	693.93
Total		192.50		1092.68

FAR & Tenement Details

Block	No. of Same Bldg	Total Built Up Area (Sq.mt.)	Existing Built Up Area (Sq.mt.)	Proposed Built Up Area (Sq.mt.)	Deductions (Area in Sq.mt.)						Existing FAR Area (Sq.mt.)	Proposed FAR Area (Sq.mt.) Educational	Total FAR Area (Sq.mt.)
					StairCase	Lift	Lift Machine	Void	Ramp	Parking			
A (A)	1	3849.48	3633.07	149.20	697.00	16.75	3.35	173.64	67.20	1092.68	1766.68	32.19	1798.86
Grand Total:	1	3849.48	3633.07	149.20	697.00	16.75	3.35	173.64	67.20	1092.68	1766.68	32.19	1798.86

Approval Condition :

This Plan Sanction is issued subject to the following conditions :

1.The sanction is accorded for:
a) Consisting of "Block - A (A) Wing - A-1 (A) Consisting of BASEMENT, GF+2UP."
2.The sanction is accorded for Nursery School-A (A) only. The use of the building shall not deviate to any other use.
3.Car Parking reserved in the plan should not be converted for any other purpose.
4.Development charges towards increasing the capacity of water supply, sanitary and power main is to be paid to the concerned authority.
5.Necessary ducts for running telephone cables, cubicles at ground level for postal services & space for dumping garbage within the premises shall be provided.
6.The applicant shall construct temporary toilets for the use of construction workers and it should be demolished after the construction.
7.The applicant shall INSURE all workmen involved in the construction work against any accident / unforeseen incidents arising during the time of construction.
8.The applicant shall not store any building material or debris / excavations on footpath or on roads or on drains. The debris shall be removed and transported to near by dumping yard.
9.The applicant / builder is prohibited from selling the setback area / open spaces and the common facility areas, which shall be accessible to all the tenants and occupants.
10.The applicant shall provide a space for locating the distribution transformers & associated equipment as per K.E.R.C (Eab.C) code leaving 3.00 mts. from the building within the premises.
11.The applicant shall provide a separate room preferably 4.50 x 3.65 m in the basement for installation of telecom equipment and also to make provisions for telecom services as per Bye-law No. 29.

12.The applicant shall maintain during construction such barricading as considered necessary to prevent dust, debris & other materials endangering the safety of people / structures etc. in & around the site.
13.Permission shall be obtained from forest department for cutting trees before the commencement of the work.
14.License and approved plans shall be posted in a conspicuous place of the licensed premises. The owner shall keep a copy of sanctioned plans with specifications available and mounted on a frame and displayed and they shall be made available during inspections.
15.If any owner / builder contravenes the provisions of Building Bye-laws and rules in force, the Architect / Engineer / Supervisor will be informed by the Authority in the first instance, warned in the second instance and cancel the registration if the same is repeated for the third time.
16.Technical personnel, applicant or owner as the case may be shall strictly adhere to the duties and responsibilities specified in Schedule - IV (Bye-law No. 3.8) under sub section IV-A (e) to (k).
17.The owner / builder shall intimate to the BBMP authorities immediately after the foundation is ready.
18.On completion of foundation or footings before erection of walls on the foundation and in the case of columnar structure before erecting the columns "COMMENCEMENT CERTIFICATE" shall be obtained.
19.Construction or reconstruction of the building should be completed before the expiry of five years from the date of issue of license & within one month after its completion shall apply for permission to occupy the building.
20.The building should not be occupied without obtaining "OCCUPANCY CERTIFICATE" from the competent authority.
21.Drinking water supplied by BWSSB should not be used for the construction activity of the building.
22.The applicant shall ensure that the Rain Water Harvesting Structures are provided & maintained in good repair for storage of water for non-potable purposes or recharge of ground water at all times having a minimum total capacity mentioned in the Bye-law 32(a).
23.The building shall be designed and constructed adopting the norms prescribed in National Building Code of India and the Indian Standards applicable as mandatory specified in NBC 1893-2002 published by the Bureau of Indian Standards making the building resistant to earthquake.
24.The applicant should provide solar water heaters as per table 17-F of Bye-law No. 29 for the building.
25.Facilities for physically handicapped persons prescribed in schedule XI (Bye laws - 31) of Building bye-laws 2003 shall be ensured.
26.The applicant shall provide at least one common toilet in the ground floor for the use of the physically handicapped persons. Ramps with a gradient not exceeding 1:12 shall be approached through a ramp for the Physically Handicapped persons together with the required width.
27.The Occupancy Certificate will be considered only after ensuring that the provisions of conditions vide Sl. No. 22, 24, 25 & 26 are provided in the building.
28.The applicant shall ensure that no inconvenience is caused to the neighbors in the vicinity of construction and that the construction activities shall stop before 10.00 PM and shall not resume the work earlier than 7.00 AM to avoid hindrance during late hours and early morning hours.

29.Garbage originating from Apartments / Commercial buildings shall be segregated into organic and inorganic waste and should be processed in the Recycling processing unit ---- k.g capacity installed at site for its use / disposal (Applicable for Residential units of 20 and above and 2000 Sqm and above built up area for Commercial building).
30.The structures with basements shall be designed for structural stability and safety to ensure for soil stabilization during the course of excavation for basements with safe design for retaining walls and super structure for the safety of the structure as well as neighboring property, public roads and footpaths, and besides ensuring safety of workman and general public by erecting safe barricades.
31.Sufficient two wheeler parking shall be provided as per requirement.
32.Traffic Management Plan shall be obtained from Traffic Management Consultant for all high rise structures which shall be got approved from the Competent Authority if necessary.
33.The owner / association of high-rise building shall obtain fire clearance certificate from Karnataka Fire and Emergency Department every Two years with due inspection by the department regarding working condition of Fire Safety Measures installed. The certificate should be produced to the Corporation and shall get the renewal of the permission issued once in Two years.
34.The Owner / Association of high-rise building shall get the building inspected by empanelled agencies of the Karnataka Fire and Emergency Department to ensure that the equipment's installed are in good and workable condition, and an affidavit to that effect shall be submitted to the Corporation every Two years from the date of occupancy.
35.The Owner / Association of high-rise building shall obtain clearance certificate from the Electrical Inspectorate every Two years with due inspection by the Department regarding working condition of Electrical installation (Lifts etc.) . The certificate should be produced to the BBMP and shall get the renewal of the permission issued that once in Two years.
36.The Owner / Association of the high-rise building shall conduct two mock - trials in the building , one before the onset of summer and another during the summer and assure complete safety in respect of Fire & Life.
37.The Builder / Contractor / Professional responsible for supervision of work shall not shall not materially and structurally deviate the construction from the sanctioned plan, without previous approval of the authority. They shall explain to the owner a about the risk involved in contravention of the provisions of the Act, Rules, Bye-laws, Zoning Regulations, Standing Orders and Policy Orders of the BBMP.
38.The construction or reconstruction of a building shall be commenced within a period of two (2) years from date of issue of licence. Before the expiry of two years, the Owner / Developer shall give intimation to BBMP (Sanctioning Authority) of the intention to start work in the form prescribed in Rule-18 (1) read with Rule-18 (3) of Karnataka Municipal Corporations Building Rules for inspection or footing of walls / columns of the foundation. Otherwise the plan sanction deemed cancelled.
39.In case of Development plan, Parks and Open Spaces area and Surface Parking area shall be earmarked and reserved as per Development Plan issued by the Bangalore Development Authority.
40.All other conditions and conditions mentioned in the work order issued by the Bangalore Development Authority while approving the Development Plan for the project should be strictly adhered to.
41.The Applicant / Owner / Developer shall abide by the collection of solid waste and its segregation as per solid waste management bye-law 2016.
42.The applicant/owner/developer shall abide by sustainable construction and demolition waste management as per solid waste management bye-law 2016.
43.The Applicant / Owners / Developers shall make necessary provision to charge electrical vehicles.
44.The Applicant / Owner / Developer shall plant one tree for ea ches measuring 160 Sqm up to 240 Sq.m of the FAR area and two trees for each measuring 240 Sq.m and above and up to 400 Sq.m and for every 240 Sq.m of the FAR area as part thereof in case of Apartment / group housing / multi-dwelling unit/development plan.
45.In case of any false information, misrepresentation of facts, or pending court cases, the plan sanction is deemed cancelled.
46.Also see, building licence for special conditions, if any.
Special Condition as per Labour Department of Government of Karnataka vide ADDENDUM (Howalaag Hoodiea) Letter No. LD/95LET/2013, dated: 31-04-2013 :

1.Registration of:
Applicant / Builder / Owner / Contractor and the construction workers working in the construction site with the "Karnataka Building and Other Construction workers Welfare Board"should be strictly adhered to.

2.The Applicant / Builder / Owner / Contractor should submit the Registration of establishment and list of construction workers engaged at the time of issue of Commencement Certificate. A copy of the same shall also be submitted to the concerned local Engineer in order to inspect the establishment and ensure the registration of establishment and workers working at construction site or work place.
3.The Applicant / Builder / Owner / Contractor shall also inform the changes if any of the list of workers engaged by him.
4.At any point of time No Applicant / Builder / Owner / Contractor shall engage a construction worker at his site or work place who is not registered with the "Karnataka Building and Other Construction workers Welfare Board".

Note :

1.Accommodation shall be provided for setting up of schools for imparting education to the children o f construction workers in the labour camps / construction sites.
2.Drinking water and toilets shall be furnished by the builder / contractor to the Labour Department which is mandatory.
3.Employment of child labour in the construction activities strictly prohibited.
4.Obtaining NOC from the Labour Department before commencing the construction work is a must.
5.BBMP will not be responsible for any dispute that may arise in respect of property in question.
6.In case if the documents submitted in respect of property in question is found to be false or fabricated, the plan sanctioned stands cancelled automatically and legal action will be initiated.

AREA STATEMENT (BBMP)	VERSION NO : 1.0.16
	VERSION DATE: 10/11/2020

PROJECT DETAIL:		
Authority: BBMP	Plot Use: Educational	
Inward_No: BBMP/Ad.Com./N.K/0802/20-21	Plot SubUse: Nursery School	
Application Type: General	Land Use Zone: Public and Semi Public	SCALE : 1:100
Proposal Type: Building Permission	Plot/Sub Plot No.: 17/A1	
Nature of Sanction: ADDITION OR EXTENSION	Khata No. (As per Khata Extract): 1203/17/A1	
Location: RESIDENTIAL	Locality / Street of the property: "A" SECTOR YELAHANKA NEW TOWN	
Building Line Specified as per Z.R: NA		
Zone: Yelahanka		
Ward: Ward-004		
Planning District: 304-Byatarayanapura		

AREA DETAILS:		SQ.MT.
AREA OF PLOT (Minimum)	(A)	1575.90
NET AREA OF PLOT	(A-Deductions)	1575.90
COVERAGE CHECK		
Permissible Coverage area (55.00 %)		767.84
Proposed Coverage Area (47.65 %)		750.55
Achieved Net coverage area (47.65 %)		750.55
Balance coverage area left (2.35 %)		37.00
FAR CHECK		
Permissible F.A.R. as per zoning regulation 2015 (2.25)		3181.80
Additional F.A.R within Ring I and II (for amalgamated plot -)		0.00
Allowable TDR Area (60% of Perm.FAR)		0.00
Premium FAR for Plot within Impact Zone (-)		0.00
Total Permi. FAR area (2.25)		3181.80
Special FAR (1.14) area		32.19
Existing Special FAR (1%)		1766.68
Proposed FAR Area		1798.86
Achieved Net FAR Area (1.14)		1798.86
Balance FAR Area (0.88)		1382.94
BUILT UP AREA CHECK		
Proposed BuiltUp Area		3849.48
Existing BUA Area		3633.07
Substructure Area Add in BUA (Layout Lvl)		1.27
Achieved BuiltUp Area		3183.54

Approval Date : 01/21/2021 12:38:50 PM

Payment Details

Sr No.	Challan Number	Receipt Number	Amount (INR)	Payment Mode	Transaction Number	Payment Date	Remark
1	BBMP/2032/CH/20-21	BBMP/2032/CH/20-21	35	Online	110230547/0	10/12/2020 1:24:16 PM	-
	No.		Head		Amount (INR)	Remark	
	1		Scrutiny Fee		35	-	

Color Notes

COLOR INDEX

- PLOT BOUNDARY
- ABUTTING ROAD
- PROPOSED WORK (COVERAGE AREA)
- EXISTING (To be retained)
- EXISTING (To be demolished)

OWNER / GPA HOLDER'S SIGNATURE

OWNER'S ADDRESS WITH ID NUMBER & CONTACT NUMBER :
The Chairman, Sri Ramakrishna Educational Trust (R) Represented by Sri Devadas "A" SECTOR YELAHANKA NEW TOWN

ARCHITECT/ENGINEER /SUPERVISOR 'S SIGNATURE
KIRAN KUMAR 005 No 336, Talakaveri layout, Amruthahalli, Bangalore-92, Mob:9535864099 e-4180/2016-17

PROJECT TITLE :
PLAN SHOWING THE ADDITIONS & ALTERATIONS TO NURSING SCHOOL BUILDING AT SITE NO 17/A1,KATHA NO 1203/17/A1, 'A' SECTOR YELAHANKA NEW TOWN,WARD NO:04,BANGALORE.

DRAWING TITLE : 1950834077-19-01-2021 11-37-319_ETAPROOT COLLEGE FINAL

SHEET NO : 2

Note: Earlier plan sanction vide L.P.No.
dated: ..... is deemed cancelled.
The modified plans are approved in accordance with the acceptance for approval by the Joint Commissioner (YELAHANKA) on date 21/01/2021.
vide lp number: BBMP/Ad.Com./YLK/0802/20-21 ..... subject to terms and conditions laid down along with this modified building plan approval.

This approval of Building plan/ Modified plan is valid for two years from the date of issue of plan and building licence by the competent authority.

YELAHANKA

UserDefinedMetric (1650.00 x 910.00MM)

This is system generated report and does not require any signature.
Accuracy of Scrutiny Report and Drawing is subject to accuracy of end-user provided data, 3rd party software/hardware/services, etc. We are not liable for any damages which may arise from use, or inability to use the Application.